PRODUCT SHEET

Description:
Shower Hinge "Linz", Wall/Glass,SS-Look,No Adjustment,Centre Back Pl. 6-10mm Glass Thickness,No Angle Adjustment Function, but 25DG Return Function, Brass Material, Rectangular Shape, w/Shamfered Edges

Item number:
15.23.841-9

Units	Box	Carton	HS Code	Barcode
Pcs.	1	20	8302100090	5704866060004

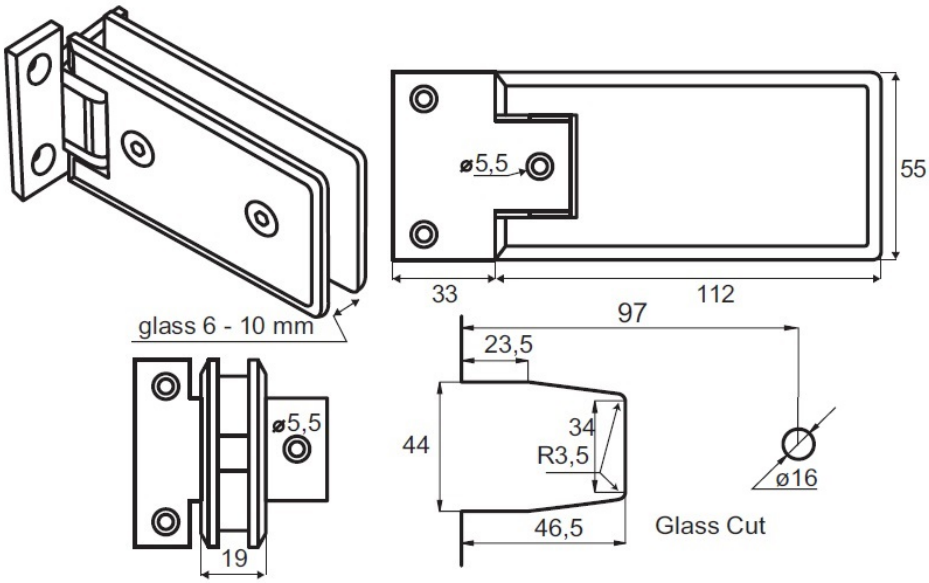

SISO A/S
Mileparken 11
DK-2740 Skovlunde
Denmark
VAT: DK 24786013

Phone +45 45 830 900

www.siso.dk
siso@siso.dk

Danske Bank
Nytorv Branch
Copenhagen
SWIFT: DABADKKK

Account no.
4180 3112 112936
IBAN Account
DK7230003112112936